FRH 11 6.10 WA11 B7 CU (277 237)

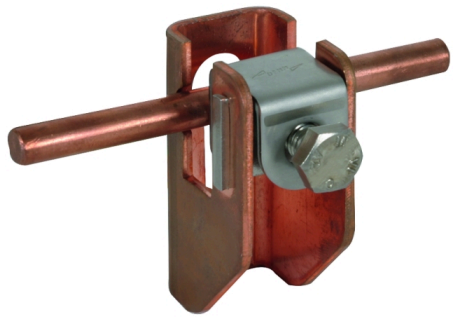

Figure without obligation

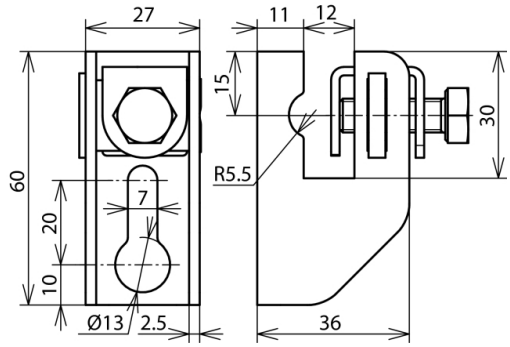

Type Part No.	FRH 11 6.10 WA11 B7 CU 277 237
Material of conductor holder	Cu
Distance from wall	11 mm
Fixing	Ø13 and 7 x 20 mm
Clamping range Rd / Fl	6-10 / 11 mm
Slot width	12 mm
Screw	M8 x 25 mm
Material of screw	StSt
Standard	EN 62561-4
Weight	126 g
Customs tariff number	85389099
GTIN	4013364110991
PU	25 Stk

We reserve the right to introduce changes in performance, configuration and technology, dimensions, weights and materials in the course of technical progress. The figures are shown without obligation.